WiTricity®

WHITEPAPER

Highly Resonant Wireless Power Transfer: Safe, Efficient, and Over Distance

Dr. Morris Kesler, WiTricity Corporation

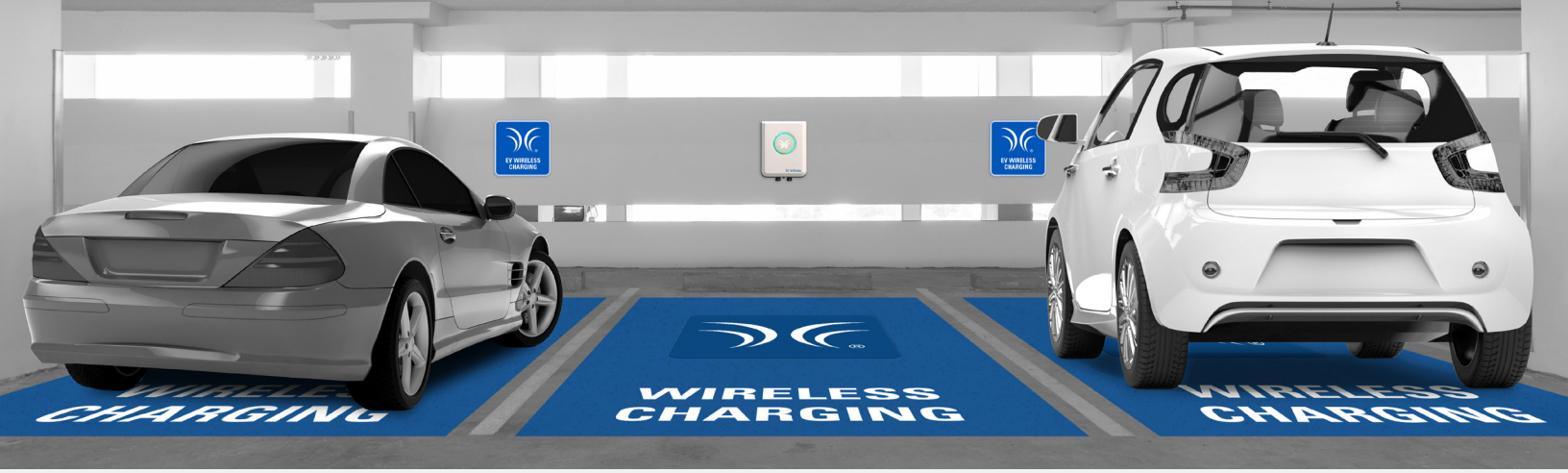

BACKGROUND

The idea of transmitting power through the air has been around for over a century, with Nikola Tesla's ideas perhaps being the most well-known early attempts to do so[1]. Most approaches to wireless power transfer use an electromagnetic (EM) field of some frequency for transferring power. Lasers can transmit power via a collimated beam of light to a remote detector where the received photons are converted to electrical energy. Efficient transmission over large distances is possible with this approach.

However, complicated pointing and tracking mechanisms are needed to maintain proper alignment between moving transmitters and/or receivers. In addition, objects that get between the transmitter and receiver can block the beam, interrupting the power transmission and, depending on the power level, possibly causing harm. At microwave frequencies, a similar approach can be used to efficiently transmit power over large distances using the radiated EM field from appropriately sized antenna[2]. However, similar caveats about safety and system complexity apply to these radiative approaches.

It is also possible to transmit power using non-radiative fields. As an example, the operation of a transformer can be considered a form of wireless power transfer since it uses the principle of magnetic induction to transfer energy from a primary coil to a secondary coil without a direct electrical connection. Inductive chargers, such as those found commonly in electric toothbrushes, operate on this same principle. However, for these systems to operate efficiently, the primary coil (source) and secondary coil (device) must be in close proximity and carefully positioned to one another.

But what about going over somewhat larger distances or having more freedom in positioning the source and device relative to each other? That is the question a group at the Massachusetts Institute of Technology (MIT) asked themselves. They explored many techniques for transmitting power over "mid-range" distances and arrived at a non-radiative approach that uses resonance to enhance the efficiency of the energy transfer (see Physics of Highly Resonant Power Transfer for details)[3-6].

High quality factor resonators enable efficient energy transfer at lower coupling rates, i.e., at greater distances and/or with more positional freedom than is otherwise possible (and therefore, this approach is sometimes referred to as "highly resonant" wireless power transfer (HR-WPT)). The MIT team demonstrated the highly resonant technique using a magnetic field to transfer energy over a distance of two meters, and an industry was born. In some instances, this technology is also referred to as "magnetic resonance", and it is often contrasted to "induction" for its ability to efficiently transfer power over a range of distances and with positional and orientational offsets.

SYSTEM DESCRIPTION

Across an application space that spans power levels from less than a watt to multiple kilowatts, a wireless energy transfer system based on HR-WPT often has a common set of functional blocks. A general diagram of such a system is shown in *Figure 1*.

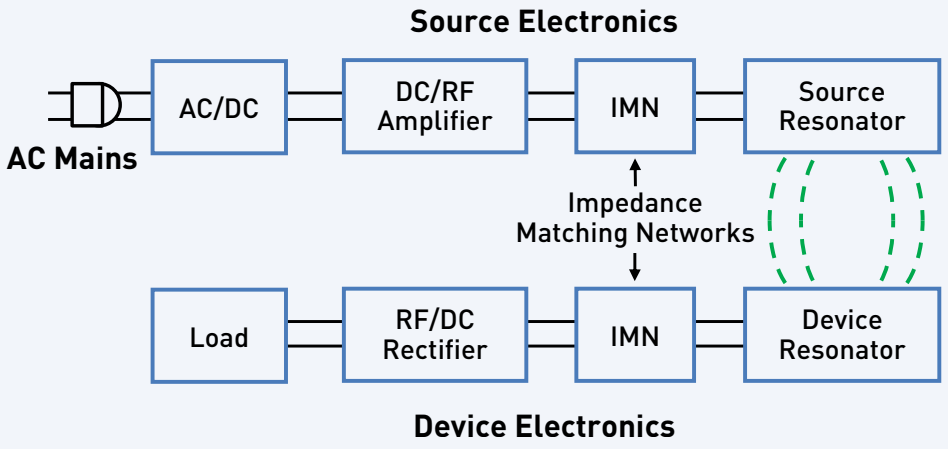

Figure 1: Block diagram of a wireless energy transfer system

Progressing from left to right on the top line of the diagram, the input power to the system is usually either wall power (AC mains) which is converted to DC in an AC/DC rectifier block, or alternatively, a DC voltage directly from a battery or other DC supply. In high power applications, a power factor correction stage may also be included in this block. A high efficiency switching amplifier converts the DC voltage into an RF voltage waveform used to drive the source resonator. An impedance matching network (IMN) is often used to effectively couple the amplifier output to the source resonator while enabling efficient switching-amplifier operation. Class D or E switching amplifiers are suitable in many applications and generally require an inductive load impedance for highest efficiency.

The IMN serves to transform the source resonator impedance, loaded by the coupling to the device resonator and output load, into such an impedance for the source amplifier. The magnetic field generated by the source resonator couples to the device resonator, exciting the resonator and causing energy build-up. This energy is coupled out of the device resonator to do valuable work, for example, directly powering a load or charging a battery. A second IMN may be used here to efficiently couple energy from the resonator to the load. It may transform the actual load impedance into an effective load impedance seen by the device resonator, closely matching the loading for optimum efficiency *(Equation 5)*. For loads requiring a DC voltage, a rectifier converts the received AC power back into DC.

In the earliest work at MIT, the impedance matching was accomplished by inductively coupling into the source resonator and out of the device resonator[3]. This approach provides a way to tune the input coupling, and therefore the input impedance, by adjusting the alignment between the source input coupling coil and the source resonator. Similarly, the approach also provides a way to tune the output coupling and, therefore, the effective loading on the device resonator. It does this by adjusting the alignment between the device output coupling coil and the device resonator.

With proper adjustment of the coupling values, it was possible to achieve power transfer efficiencies approaching the optimum possible efficiency *(Equation 6)*. *Figure 2* shows a schematic representation of an inductive coupling approach to impedance matching. In this circuit M_g is adjusted to provide the desired input impedance for the given loading of the source resonator. The device resonator is similarly loaded by adjusting M_L, the mutual coupling to the load. Series capacitors may be needed in the input and output coupling coils to improve efficiency unless the reactances of the coupling inductors are much less than the generator and load resistances.

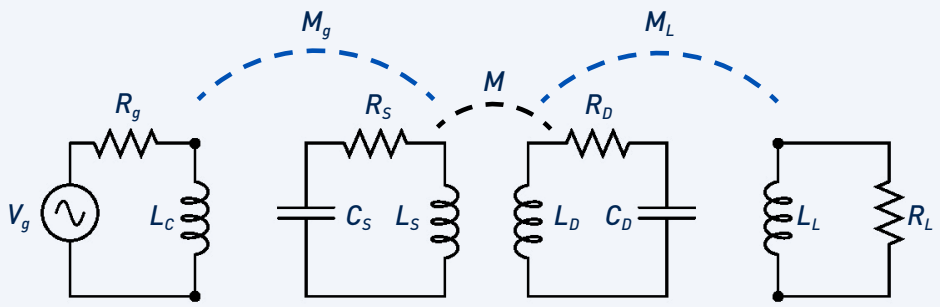

Figure 2: Schematic representation of inductively coupling into and out of the resonators

It is also possible to directly connect the generator and load to the respective resonators with various IMNs. These generally comprise components (capacitors and inductors) that are arranged in "T" and/or "pi" configurations. The values of these components may be chosen for optimum efficiency at a specific source-to-device coupling and load condition ("fixed tuned" impedance matching) or they may be adjustable to provide higher performance over a range of source-to-device positions and load conditions ("tunable" impedance matching). Requirements of the particular application will determine which approach is most appropriate from a performance and cost perspective.

A common question about wireless charging is: How efficient is it? The end-to-end efficiency of a wireless energy transfer system is the product of the wireless efficiency and the efficiency of the electronics (RF amplifier, rectifier, and any other power conversion stages, if needed).

> In high-power applications, such as the charging of electric vehicles (EVs) at multi-kilowatt levels, end-to-end efficiencies (AC input to DC output) greater than 94% have been demonstrated.

Such efficiencies require that each stage in the system have an efficiency at 98-99% or greater. Careful design at each stage is required to minimize losses to achieve such performance.

People often scoff at the notion that magnetic resonance could be as efficient as the familiar plug-in charging for EVs. However, the block diagram for a plug-in charger is similar to that of a wireless charger, with the wireless portion, i.e., the source and device resonators, replaced by a transformer. The other power electronics components are similar, so the efficiency of a well-designed wireless charger is on par with conventional plug-in chargers.

Space is usually of utmost importance in mobile electronic devices, so incorporating resonators generally involves some tradeoffs in resonator size and system efficiency to accommodate the space restrictions. Also, the application use-case may involve a wider range of magnetic coupling between source and device, which can also present a challenge for the design of the impedance matching networks. However, coil-to-coil efficiencies of 90% or more and end-to-end efficiencies over 80% are achievable in these lower power applications.

PHYSICS OF HIGHLY RESONANT WIRELESS POWER TRANSFER RESONANCE

Resonance is a phenomenon that occurs in nature in many different forms. In general, resonance involves energy oscillating between two modes. In a system at resonance, it is possible to have a significant buildup of stored energy while having only a weak excitation to the system. The build-up occurs if the energy injection rate into the system is greater than the rate of energy loss by the system.

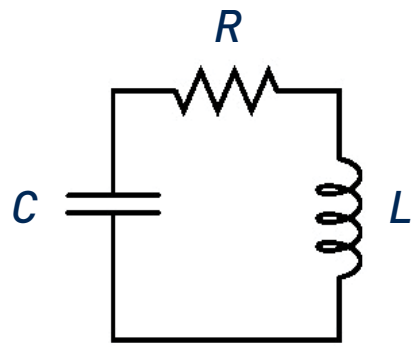

Figure 3: Circuit equivalent of an electromagnetic resonator

The characteristics of an isolated resonator can be described by two fundamental parameters, its resonant frequency ω_0 and its intrinsic loss rate, Γ. The ratio of these two parameters defines the quality factor or Q of the resonator, [$Q=\omega_0/(2\Gamma)$] a measure of how well it stores energy. An example of an electromagnetic resonator is the circuit shown in *Figure 3*, containing an inductor, a capacitor, and a resistor.

In this circuit, energy oscillates at the resonant frequency between the inductor (energy stored in the magnetic field) and the capacitor (energy stored in the electric field) and is dissipated in the resistor. The resonant frequency and the quality factor for this resonator are:

$$\omega_0 = \frac{1}{\sqrt{LC}}$$

Equation 1

$$Q = \frac{\omega_0}{2\Gamma} = \sqrt{\frac{L}{C}}\frac{1}{R} = \frac{\omega_0 L}{R}$$

Equation 2

The expression for Q shows that decreasing the loss in the circuit, i.e., reducing R, increases the quality factor of the system.

In highly resonant wireless power transfer systems, the system resonators must have a high-quality factor to efficiently transfer energy. High-Q electromagnetic resonators are typically made from conductors and components with low absorptive (also sometimes referred to as ohmic, resistive, series resistive, etc.) losses, exhibit low radiative losses, and as a result, have relatively narrow resonant frequency widths. Also, the resonators may be designed to reduce their interactions with extraneous objects, which may cause loss.

COUPLED RESONATORS

If two resonators are placed in proximity to one another such that there is coupling between them, it becomes possible for the resonators to exchange energy. The efficiency of the energy exchange depends on the characteristic parameters for each resonator and the energy coupling rate, κ, between them. The dynamics of the two-resonator system can be described using coupled-mode theory[3], or from an analysis of a circuit equivalent of the coupled system of resonators.

One equivalent circuit for coupled resonators is the series resonant circuit shown in *Figure 4*.

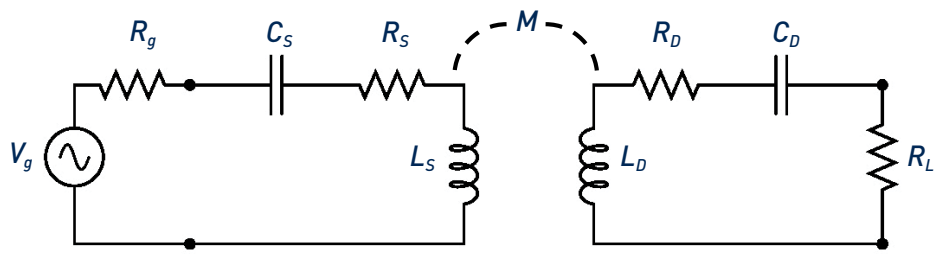

Figure 4: Equivalent circuit for the coupled resonator system

Here the generator is a sinusoidal voltage source with amplitude V_g frequency ω with equivalent generator resistance R_g.The source and device resonator coils are represented by the inductors L_S and L_D, which are coupled through the mutual inductance M, where $M = k\sqrt{L_S L_D}$. Each coil has a capacitor to form a resonator. The resistances R_S and R_D are the parasitic resistances (including both ohmic and radiative losses) of the coil and resonant capacitor for the respective resonators. The load is represented by an equivalent AC resistance R_L.

Analysis of this circuit gives the power delivered to the load resistor, divided by the maximum power available from the source when both the source and device are resonant at ω as:

$$\frac{P_L}{P_{g,max}} = \frac{4 \cdot U^2 \frac{R_g}{R_S}\frac{R_L}{R_D}}{\left(\left(1+\frac{R_g}{R_S}\right)\left(1+\frac{R_L}{R_D}\right)+U^2\right)^2}$$

Equation 3

...where...

$$U = \frac{\omega M}{\sqrt{R_S R_D}} = \frac{\kappa}{\sqrt{\Gamma_S \Gamma_D}}$$

Equation 4

...is the figure-of-merit for this system.

We can choose the generator and load resistances that give the best system performance (or use an impedance transformation network to match to other resistance values). If we select:

$$\frac{R_g}{R_S} = \frac{R_L}{R_D} = \sqrt{1 + U^2}$$

Equation 5

...then the efficiency of the power transmission as defined above is maximized and is given by:

$$\eta_{opt} = \frac{U^2}{\left(1 + \sqrt{1 + U^2}\right)^2}$$

Equation 6

...and shown in *Figure 5*. Here one can see that highly efficient energy transfer is possible in systems with large values of *U*. Note that the impedance matching described above is equivalent to the coupled-mode theory treatment that shows work extracted from a device can be modeled as a circuit resistance that has the effect of contributing an additional term, Γ_w, to an unloaded device object's energy loss rate Γ_D, so that the overall energy loss rate is given by:

$$\Gamma_D' = \Gamma_D + \Gamma_w$$

Equation 7

...and that the efficiency of the power transmission is maximized when:

$$\frac{\Gamma_w}{\Gamma_D} = \sqrt{1 + \left(\frac{\kappa^2}{\Gamma_S \Gamma_D}\right)} = \sqrt{1 + k^2 Q_S Q_D} = \sqrt{1 + U^2}$$

Equation 8

With a maturing technology base and a broad application space, wireless power transfer will become prevalent in many areas of life in the coming years.

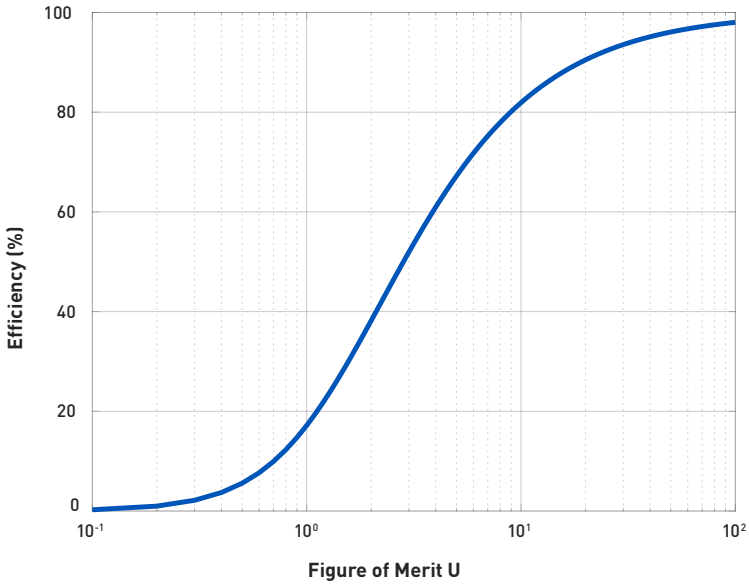

Figure 5: Optimum efficiency of energy transfer as a function of the figure-of-merit, U.

Note that the best possible efficiency of a wireless power transmission system only depends on the system figure-of-merit, which can also be written in terms of the magnetic coupling coefficient between the resonators, k, and the unloaded resonator quality factors, Q_S and Q_D.

$$U = \frac{\omega M}{\sqrt{R_S R_D}} = k\sqrt{Q_S Q_D}$$

Equation 9

Knowing the resonator quality factors and the range of magnetic coupling between them for a specific application, one can use Equations 6 and 9 to determine the best efficiency possible for the system.

The analysis above illustrates the importance of the coupling factor and resonator quality factor for wireless power transfer using magnetic resonance. The magnetic coupling coefficient is a dimensionless parameter representing the fraction of magnetic flux that is coupled between the source and device resonators, and has a magnitude between zero (no coupling) and one (all flux is coupled). Coupling is a function of the relative sizes of the resonators, the distance between them, and their relative orientation. Wireless power transmission systems based on traditional induction (e.g., cordless toothbrushes) are typically designed for larger values of coupling and, as a result, require close spacing and precise alignment between source and device. *Equations 6* and *9* show that using high-quality resonators allows for efficient operation even at lower coupling values, eliminating the need for precise positioning between source and device and providing for a greater freedom of movement. The ability to achieve high efficiency even at low coupling factors expands the application space for wireless power far beyond that of traditional induction.

HUMAN SAFETY CONSIDERATIONS

A common question about wireless power transfer using magnetic resonance systems is: Is it safe? Perhaps because these systems can efficiently exchange energy over mid-range distances, people may assume they are being exposed to large, and potentially dangerous, electromagnetic fields when using these systems.

Of course, WiTricity's technology is NOT "electricity-in-the-air" but rather, a technology that uses oscillating magnetic fields to mediate the wireless energy exchange. With proper design, the stray electric and magnetic fields can be kept below the well-established and long-standing human safety limits that regulate all electromagnetic consumer devices, including cell phones, wireless routers, Bluetooth headphones, radio transmitters, etc. At WiTricity, we perform a detailed electromagnetic analysis, ensuring the systems will meet all applicable human safety guidelines.

THE FUTURE OF WIRELESS POWER TRANSFER

With a maturing technology base and a broad application space, wireless power transfer will become prevalent in many areas of life in the coming years. Since the original demonstrations at MIT early this century, magnetic resonance technology has moved from a scientific experiment to the production line where it is now being incorporated into mass-produced autonomous factory robotics and other industrial devices, drones, e-mobility devices like electric scooters, and more. Even more exciting, EVs, both plug-in hybrids and full battery EVs, are now shipping with factory-installed wireless charging. Worldwide standards for wireless power in all these application areas have been developed to ensure interoperability across products and brands, facilitate the deployment of wireless charging infrastructure, and help to accelerate adoption of the technology.

Some advanced automotive technology, such as vehicles with autonomous navigation and ultimately driverless operation, along with the expansion of car sharing services to better utilize such vehicles, will benefit significantly from the ability to charge without human intervention. In fact, wireless charging is almost essential for deploying autonomous vehicles where there may not be anyone around to connect a wired charger (or otherwise add fuel). Research into dynamic charging of vehicles, using the same basic magnetic resonance technology is underway and was demonstrated by Qualcomm's Halo team in 2017, now a part of WiTricity.

Of course, there will likely be applications for wireless power that we cannot envision today. With the pace of technology innovation, expect to see wireless power technology deployed not only in the areas mentioned here, but in many more applications.

Morris P. Kesler, Ph.D.

CHIEF TECHNOLOGY OFFICER
WiTricity AI Tech, LLC

Dr. Morris Kesler is the Chief Technology Officer at WiTricity AI Tech, LLC where he leads research and development activities in wireless power technology. He joined WiTricity in 2007 and has served as Chief Engineer and vice president of research and development.

Before joining WiTricity AI Tech, LLC, he worked at start-up companies developing unique optical communication and sensing systems and high-speed, long haul optical transport systems. Dr. Kesler also worked at the Georgia Tech Research Institute where he led research programs in electromagnetic scattering, antenna arrays, novel antenna structures and photonic band-gap materials. He holds over 100 patents and has published over 40 technical journal and conference papers. He holds BS, MS, and PhD degrees from the Massachusetts Institute of Technology in Electrical Engineering and Computer Science.

References:

1 Nicola Tesla, "The transmission of electrical energy without wires", Electrical World and Engineer, March 1905. http://www.tfcbooks.com/tesla/1904-03-05.htm, (acc. Dec. 08)

2 William C. Brown, "The history of power transmission by radio waves", Microwave Theory and Techniques, IEEE Transactions, 32(9):1230-1242, September 1984.

3 A.B. Kurs, A. Karalis, R. Moffatt, J.D. Joannopoulos, P.H. Fisher, and M. Soljacic, "Wireless Power Transfer via Strongly Coupled Magnetic Resonances", Science, 317, pp. 83-86, (2007).

4 A. Karalis, J.D. Joannopoulos, and M. Soljacic, "Efficient Wireless Non-radiative Mid- range Energy Transfer", Ann. Phys., 323, pp. 34-48, (2008); published online April 2007.

5 J.D. Joannopoulos, A. Karalis, and M. Soljacic, "Wireless Non-Radiative Energy Transfer", U.S. Patent Numbers 7,741,734; 8,022,576; 8,084,889; and 8,076,800.

6 A. Karalis, A.B. Kurs, R. Moffatt, J.D. Joannopoulos, P.H. Fisher, and M. Soljacic, "Wireless Energy Transfer", U.S. Patent Numbers 7,825,543 and 8,097,093.

WiTricity has many resources to help you stay informed about wireless EV charging.

- Check out our other **white papers:** https://www.witricity.com/knowledge-center.php
- Watch **videos** that bring wireless EV charging to life: https://www.witricity.com/videos.php
- Read our **blog** with posts featuring keen insights and information on the hot topics surrounding wireless EV charging: https://www.witricity.com/blog-and-newsroom.php

For more information about WiTricity's wireless charging solutions, contact:
customercommunications@witricity.com

ABOUT WITRICITY

WiTricity is the pioneer in wireless charging for electric vehicles, leading the development and implementation of magnetic resonance technology across passenger and commercial vehicles alike. The company's products are backed by an extensive patent portfolio critical to ratified global EV wireless charging standards including SAE, ISO, and GB. Automakers and Tier 1 suppliers rely on WiTricity to help accelerate the adoption of EVs by eliminating the hassle of plug-in charging and setting the stage for future autonomy. Beyond EVs, WiTricity technology is indispensable to the wireless charging of all products, from consumer electronics to micro-mobility to robotics.

© WiTricity 2021 | witricity.com